AUDIOPHILE ACOUSTICS

B2®

SWEET LIKE DANISH

RIOT SERIES SUBWOOFERS

MODEL: RIOT10D2

MODEL: RIOT15D2

MODEL: RIOT15D4

PRODUCT ID: RI10D218

PRODUCT ID: RI15D218

PRODUCT ID: RI15DR18

WWW.B2AUDIO.COM / WWW.FACEBOOK.COM/B2AUDIO

CE

SWEET LIKE DANISH

MODEL: RIOT10 / RIOT15

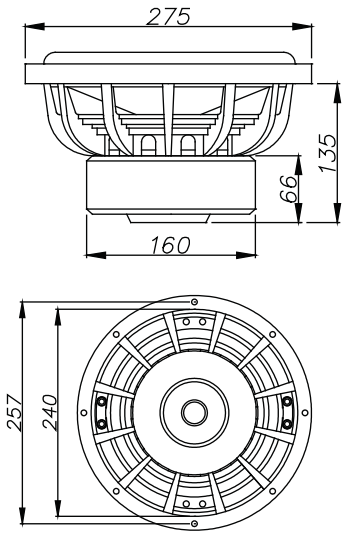

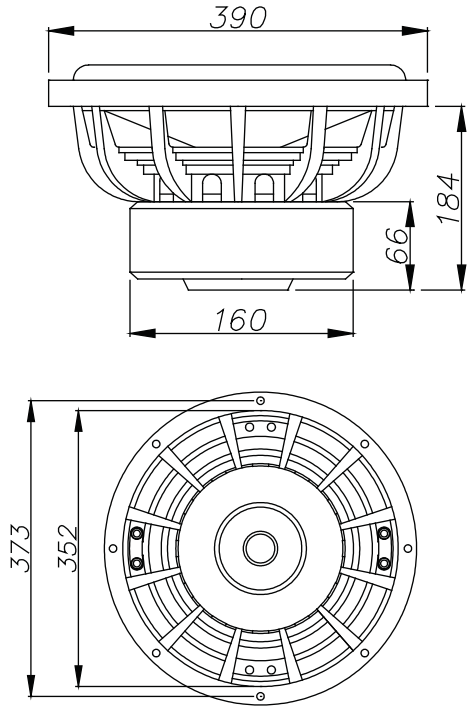

MODEL:	RIOT10D2	RIOT12D2	RIOT12D4	RIOT15D2	RIOT15D4
SENSITIVITY:	86.8 dB			92.1	89.7 dB
NOMINAL IMPEDANCE:	Dual 2 Ω			Dual 2 Ω	Dual 4 Ω
DC RESISTANCE (DC):	1.9 Ω			1.9 Ω	3.2 Ω
VOICE COIL DIM:	3"			3"	3"
POWER HANDLING*:	750 Watts			750 Watts	750 Watts
PEAK DYNAMIC POWER:	1500 Watts			1500 Watts	1500 Watts
XMAX ONE WAY (MM):	18			18	18
VAS:	12.7 L			62.2 L	63.2 L
FS:	35 Hz			30.9 Hz	30.4 Hz
QES:	0.43			0.54	0.63
QMS:	4.89			5.49	5.54
QTS:	0.39			0.49	0.56
MAGNET:	120 Oz			120 Oz	120 Oz
DISPLACEMENT:	2.6 L / .09 cu.ft			6.1 L / 0.22 cu.ft	6.1 L / 0.22 cu.ft

ENCLOSURE SUGGESTIONS			
TYPE	SEALED	PORTED COMPACT	PORTED
RIOT10D2	20 L / .706 cu.ft Qtc 0.419	35 L / 1.236 cu.ft P: 4" L: 15.74" / 40 cm FB: 38 Hz	50 L / 1.76 cu.ft P: 4" L: 13.26" / 33.6 cm FB: 34 Hz
RIOT15D2	32 L / 1.125 cu.ft Qtc 0.625	80 L / 2.83 cu.ft P.A. 32.55 sq.in L: 18.22" / 46.3 cm FB: 38 Hz	134 L / 4.73 cu.ft P.A. 32.55 sq.in L: 14.7"/37.3 cm FB: 32 Hz
RIOT15D4	32 L / 1.125 cu.ft Otc 0.7	80 L / 2.83 cu.ft P.A. 32.55 sq.in L: 18.22" / 46.3 cm FB: 38 Hz	190 L / 6.73 cu.ft P.A. 32.55 sq.in L: 9.1" / 23.1 cm FB: 32 Hz

*It's essential that our speakers are given time to allow the suspension to soften up. Depening on use, this may take several weeks. While this process is undergoing, it is not recommended to apply full amplification power according to the speaker's specs. Once the moving parts have been broken in, the performance of your speaker will increase. Abuse of the the unit is **not** covered by warranty.
The warranty does not cover (1) Speakers that have been used for spl purpose in competitions, (2) Damage caused by amplifier clipping or distortion, (3) Exposure to water, oil, solvent & excessive temperatures +/-. (5) Cost of shipping to / from authorized service center.

SWEET LIKE DANISH

MODEL: ELSQ12 (EL12V4)/IS12V3/IS15V3

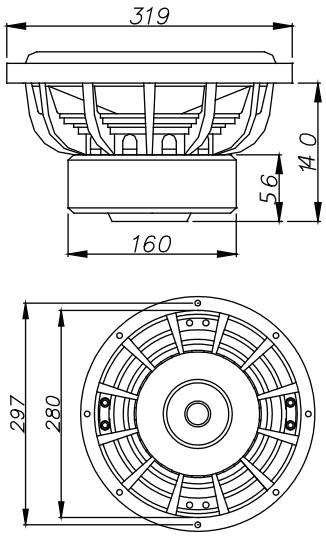

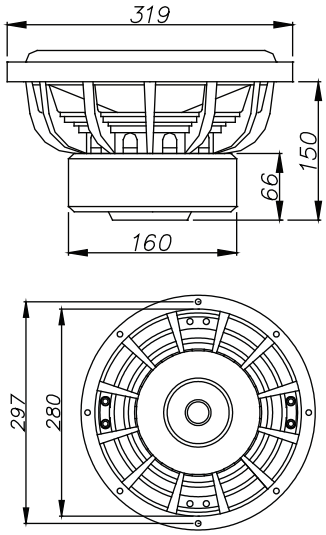

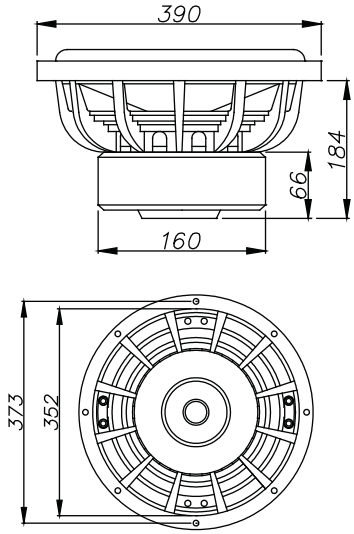

Model:	ELSQ12	IS12D2 V3	IS12D4 V3	IS15D2 V3	IS15D4 V3
Sensitivity:	89.5 dB	89 dB	86 dB	91.91 dB	87.9 dB
Nominal Impedance:	Dual 4 Ω	Dual 2 Ω	Dual 4 Ω	Dual 2 Ω	Dual 4 Ω
DC Resistance (DC):	3.8 Ω	1.9 Ω	3.3 Ω	1.9 Ω	3.3 Ω
Voice Coil Dim:	2"	2.5"	2.5"	2.5"	2.5"
Power Handling*:	500 Watts	750 Watts	750 Watts	750 Watts	750 Watts
Peak Dynamic Power:	1000 Watts	1500 Watts	1500 Watts	1500 Watts	1500 Watts
XMAX one way (mm):	15	18	18	18	18
VAS:	70.1 L	33 L	24.9 L	88.6 L	64 L
FS:	29.5 Hz	32.1 Hz	38 Hz	28.9 Hz	33 Hz
QES:	0.43	0.59	0.79	0.61	0.86
QMS:	5.95	5.84	6.3	5.95	7.6
QTS:	0.40	0.54	0.7	0.55	0.78
Magnet:	100 Oz	120 Oz	120 Oz	120 Oz	120 Oz
Displacement:	3.1 L / .0109 cu.ft	3.2 L / .114 cu.ft	3.2 L / .114 cu.ft	6.16 L / 0.218 cu.ft	6.16 L / 0.218 cu.ft

	ENCLOSURE SUGGESTIONS			
TYPE	SEALED	PORTED COMPACT	PORTED	BP 4TH
ELSQ12	20 L / .71 cu.ft Qtc 0.64	36.8 L / 1.3 cu.ft P: 4" L: 12.9" FB: 39 Hz	86.5 L / 3.1 cu.ft P.A: 23.3 sq.in L: 16.5" FB: 32 Hz	S: 22 L / .77 cu.ft P: 35 L / 1.2 cu.ft P.A. 18.6 sq.in L: 20.2"
IS12D2	25 L / .88 cu.ft Qtc 0.62	39.4 L / 1.4 cu.ft P: 4" L: 10.26" FB: 42 Hz	60 L / 2.1 cu.ft P.A. 18.6 sq.in L: 19.3" FB: 32 Hz	S: 25 L / .88 cu.ft P: 50 L / 1.77 cu.ft P.A. 18.6 sq.in L: 22.2"
IS12D4	26.6 L / .94 cu.ft Qtc 0.707	39.4 L / 1.4 cu.ft P: 4" L: 10.35" FB: 42 Hz	77 L / 2.7 cu.ft P.A. 30.15 sq.in L: 24.5" FB: 32 Hz	2:1 ratio
IS15D2	40 L / 1.4 cu.ft Otc 0.707	70 L / 2.42 cu.ft P: 6" L: 14.75" FB: 41 Hz	171 L / 6.05 cu.ft P.A. 29.4 sq.in L: 9" FB: 30 Hz	S: 43.5 L / 1.54 cu.ft P: 76.4 L / 2.7 cu.ft P.A. 18.6 sq.in L: 14.7"
IS15D4	60 L / 2.11 cu.ft Otc 0.781	70 L / 2.42 cu.ft P.A. 35.43 sq.in L: 22" FB: 38 Hz	245 L / 8.65 cu.ft P.A. 100 sq.in L: 20.36" FB: 32 Hz	2:1 ratio

*It's essential that our speakers are given time to allow the suspension to soften up. Depening on use, this may take several weeks. While this process is undergoing, it is not recommended to apply full amplification power according to the speaker's specs. Once the moving parts have been broken in, the performance of your speaker will increase. Abuse of the the unit is **not** covered by warranty.
The warranty does not cover (1) Speakers that have been used for spl purpose in competitions, (2) Damage caused by amplifier clipping or distortion, (3) Exposure to water, oil, solvent & excessive temperatures +/-. (5) Cost of shipping to / from authorized service center.